U. S. Department of Labor

Mine Safety and Health Administration
P.O. Box 25367
Denver, Colorado 80225-0367

ROCKY MOUNTAIN DISTRICT
METAL & NONMETAL MINE SAFETY & HEALTH

January 23, 2013

Mr. John Trujillo, Vice President
Silver Star Resources,LLC
P.O. Box 835
Ouray, CO 81427

RE: Star Mine Operations 05-03528

Dear Mr. Trujillo,

Your updated mine ventilation plan, and escape and evacuation plan have been received and reviewed in the District Office. A review of the plan and the revisions did not indicate any notable deficiencies. This plan will be maintained on file at the district office.

Your prompt response with changes or updates to plans is appreciated, If you have any questions or would need future assistance, please do not hesitate to contact Merle Allen Nash, Mine Safety and Health Specialist in the District Office at 303-231-5678.

Sincerely,

[redacted]

Richard Laufenberg
District Manager

Cc: Mine file
Denver FO

STAR MINE OPERATIONS LLC.
219 10TH AVE. - P.O. BOX 835
OURAY CO 81427
JRTRUJILLO@SLVRSTAR.COM
970.596.4082

JOHN R TRUJILLO – *Mine Manager*

January 10, 2013

RECEIVED
JAN 18 2013
ROCKY MTN DISTRICT OFC

Mr. Richard Lafenberg, District Manager

MSHA M/NM Rocky Mountain District

P.O. Box 25367, DFC

Denver, CO 80225

RE: Star Mine Operations 05-03528 ;57.8520 Ventilation Plan & 57.11053 Escape and Evacuation plan

Dear Mr. Laufenberg,

I am providing you with two copies of our ***updated mine map***, showing all the applicable information that your department has requested. The report addresses how we meet the MSHA requirements at this time. As I indicated in our first correspondence dated May 08, 2012 we are in rehab and development mode and will continue this type of operation until sometime in the latter half of 2013.

<u>57.8520 Ventilation Plan</u>

(a) Mine Name = **Revenue Virginius**

(b) The current mine map and scale = **Attached (scale: 1"=200')**

1. direction and quantity of principal air flows = **see map**
2. location of seals used to isolate abandoned workings = **see map**
3. location of areas withdrawn from the ventilation system = N/A
4. location of all main, booster, and auxiliary fans = **see map**

5. location of all air regulators, stoppings, and ventilation doors = **see map**

6. locations of overcasts, under casts and other airway crossover devices = N/A

7. locations of known oil or gas wells = N/A

8. locations of known underground mine opening adjacent to the mine = **see map**

9. location of permanent underground shops, diesel and oil storage, hoist rooms, compressors, battery charging stations, and explosive storage facilities. **See map for explosive storage, none of the others apply at this time.**

10. Significant changes in the ventilation system projected for one year. **Secondary escape ways that will serve as exhaust for ventilation are being designed at the current time but exact details aren't available at the present time. When the locations and their effect on the current system are known an addendum to this report will be prepared.**

c. mine fan data = **see attached report**

d. diagrams, descriptions or sketches showing how ventilation is provided to typical work places. **We currently have two main working areas in the mine, the Yellow Rose Drift S.E. and the main Revenue Tunnel extending into the Monogahela Drift N.W. Both of these working areas are being supplied abundant quantities of fresh air by the main fans as shown on the mine map. As we work in additional areas that are out of the main air flow we will use booster (auxiliary) fans and flexible vent bag to provide adequate air to those areas.**

e. The number and type of internal combustion engines units used underground. N/A **we are using battery locomotives and air powered drills and mucking machines.**

57.11053 Escape and Evacuation Plans

a. mine map with escape routes = **see attached map, this map is located at all underground working areas and main intersection areas with " you are here " clearly marked on the map.**

b. procedures of how the miners will be notified of an emergency = **described in the attached Escape and Evacuation Plan.**

c. an escape plan for each working area of the mine = **as described in a & b above.**

d. a fire fighting plan = **use of fire extinguishers and water pumps located throughout the mine and on every locomotive, main working area, rolling stock and all shops and fueling**

stations on the surface. Regular fire drills and evacuation drill will be performed for both the surface crews and the underground personnel.

e. surface procedure to follow in case of an emergency = **see attached report**

f. a statement of the availability of emergency communication = **see attached report**

I will update the map and report as we make progress or significantly alter our activity and keep you informed.

Sincerely,

[redacted]

John R. Trujillo, Mine Manager

Star Mine Operations, LLC

Revenue Mine

Fan Only
No Silencers

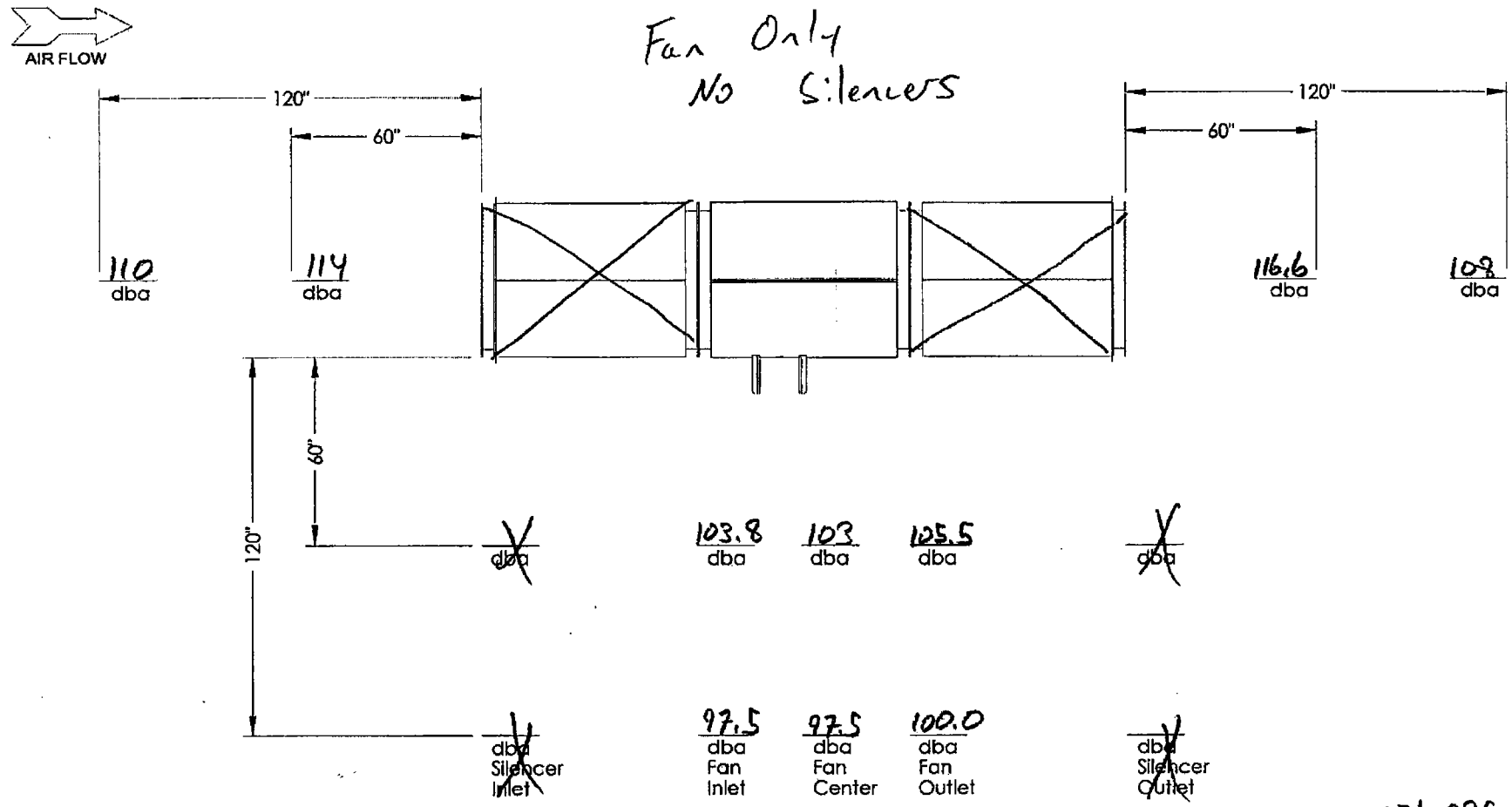

Fan Model #: 071-035-3600-B-1-D
Serial Number: 5553-5554
Conditions:

Blade Setting:
Volume:
Pressure:
Number of Blades: 10
Rotating Speed: 3600 RPM

Amp Draw:
L1: 45
L2: 44
L3: 47

Ambient dba: 45

SO #:

QTY:

DATE: 3 / 6 / 2012

SPENDRUP FAN Co.

2768 C 1/2 ROAD
P.O. BOX 4308
GRAND JCT, CO
81502
TEL: (970)243-3429
FAX: (970)242-6724

PROPERTY OF SPENDRUP FAN COMPANY

THE INFORMATION CONTAINED WITHIN THIS DOCUMENT IS CLASSIFIED AND PROPRIETARY AND NOT TO BE USED, COPIED OR REPRODUCED WITHOUT THE PRIOR WRITTEN CONSENT OF SPENDRUP FAN COMPANY

DIMENSIONS ARE IN INCHES
TOLERANCES:
FRACTIONAL ±1/32
ANGULAR: ±1°
TWO PLACE DECIMAL ±.015
THREE PLACE DECIMAL ±.005

	NAME	DATE
DRAWN		
MODELED		
ENG APPR.		

MATERIAL: Refer to Detail Drawings

FINISH

P/N QTY

PART NAME: Fan Sound Test

JOB ORDER:

SIZE: A | DWG. NO | REV. D

SCALE: 1:48 | WEIGHT: 7090.969 LBS | SHEET 1 OF 1

Inlet Silencer only

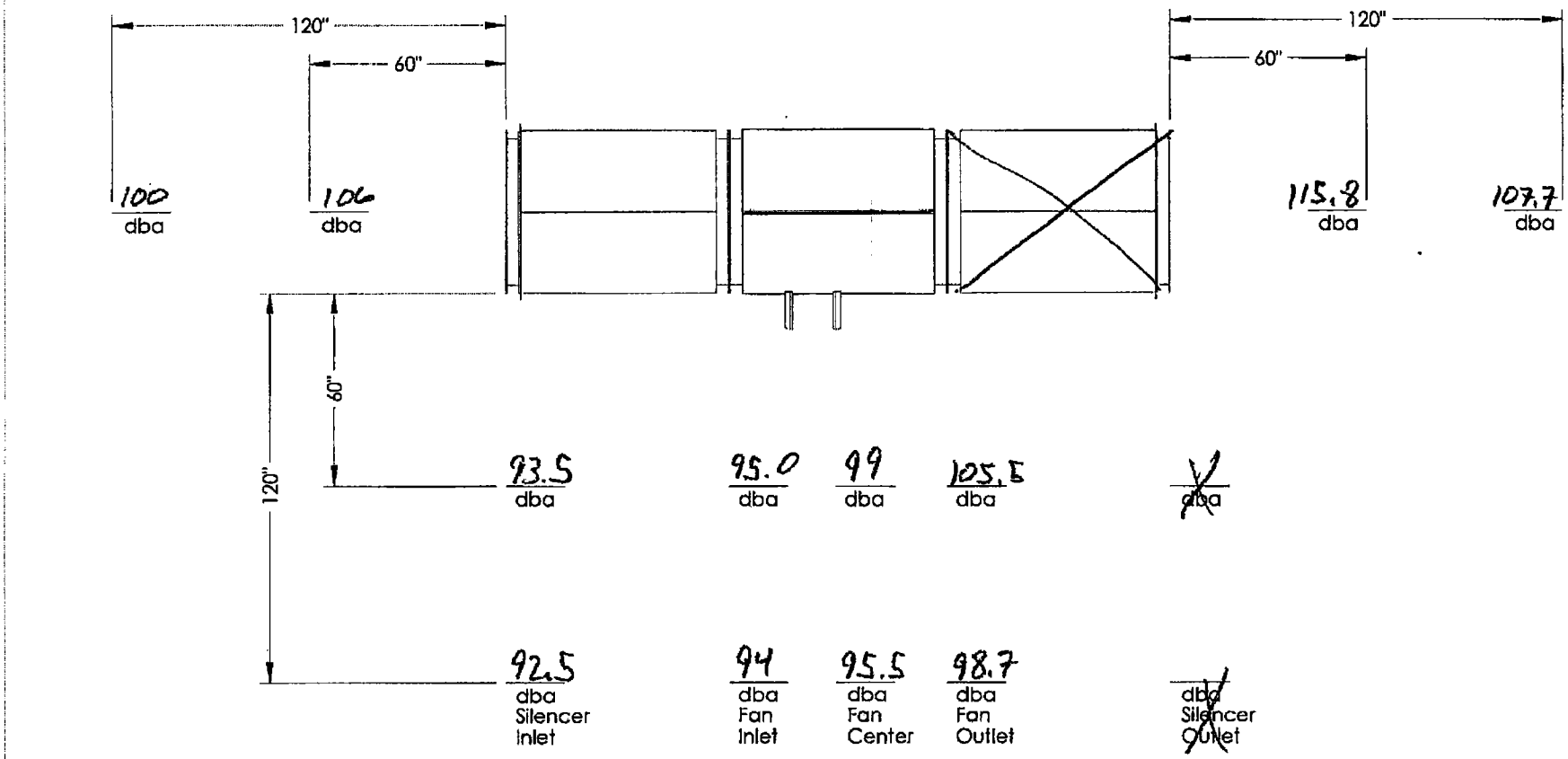

Fan Model #: 071-035-3600-D-0-1
Serial Number: 5553-5554
Conditions:

Blade Setting:
Volume:
Pressure:
Number of Blades: 10
Rotating Speed: 3600

Amp Draw:
L1: 47
L2: 48
L3: 50

Ambient dba: 48

SO #:

QTY:

DATE: ___/___/___

SPENDRUP FAN Co.

2768 C 1/2 ROAD
P.O. BOX 4308
GRAND JCT, CO
81502
TEL: (970)243-3429
FAX: (970)242-6724

PROPERTY OF SPENDRUP FAN COMPANY

THE INFORMATION CONTAINED WITHIN THIS DOCUMENT IS CLASSIFIED AND PROPRIETARY AND NOT TO BE USED, COPIED OR REPRODUCED WITHOUT THE PRIOR WRITTEN CONSENT OF SPENDRUP FAN COMPANY

DIMENSIONS ARE IN INCHES
TOLERANCES:
FRACTIONAL ±1/32
ANGULAR: ±1°
TWO PLACE DECIMAL ±.015
THREE PLACE DECIMAL ±.005

	NAME	DATE
DRAWN		
MODELED		
ENG APPR.		

MATERIAL: Refer to Detail Drawings

FINISH

P/N QTY

PART NAME: Fan Sound Test

JOB ORDER:

SIZE: A | DWG. NO | REV. D

SCALE: 1:48 | WEIGHT: 7090.969 LBS | SHEET 1 OF 1

Inlet and outlet Silencers

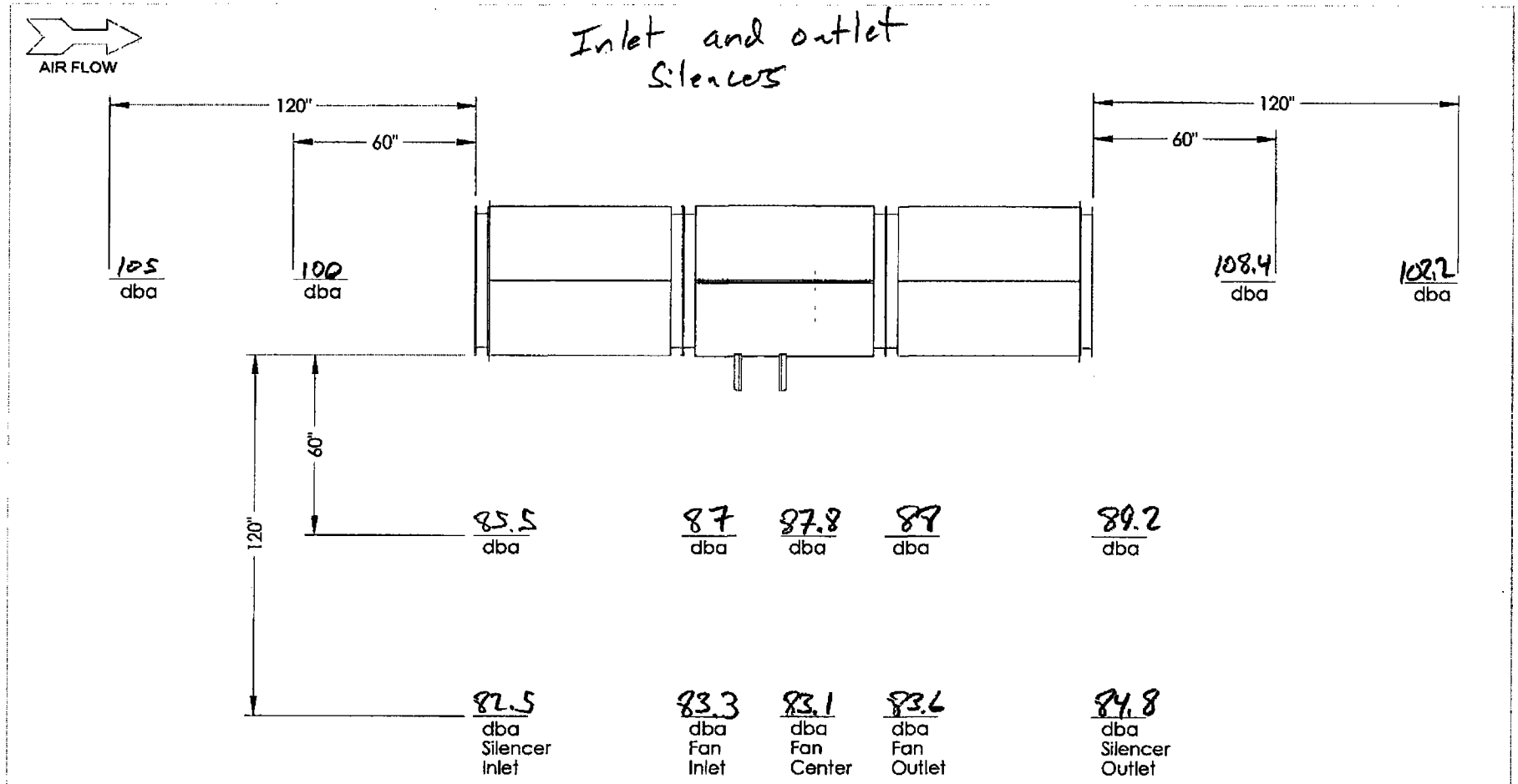

Fan Model #: 071-035-3600-B-01
Serial Number: 5553 - 5554
Conditions:

Blade Setting:
Volume:
Pressure:
Number of Blades: 10
Rotating Speed: 3600 RPM

Amp Draw:
L1: 51
L2: 52
L3: 53

Ambient dba: 54

SO #:

QTY:

DATE: 3 / 6 / 2012

SPENDRUP FAN Co.

2768 C 1/2 ROAD
P.O. BOX 4308
GRAND JCT, CO
81502
TEL: (970)243-3429
FAX: (970)242-6724

PROPERTY OF SPENDRUP FAN COMPANY

THE INFORMATION CONTAINED WITHIN THIS DOCUMENT IS CLASSIFIED AND PROPRIETARY AND NOT TO BE USED, COPIED OR REPRODUCED WITHOUT THE PRIOR WRITTEN CONSENT OF SPENDRUP FAN COMPANY

DIMENSIONS ARE IN INCHES
TOLERANCES:
FRACTIONAL ±1/32
ANGULAR: ±1°
TWO PLACE DECIMAL ±.015
THREE PLACE DECIMAL ±.005
MATERIAL: Refer to Detail Drawings
FINISH
P/N QTY

	NAME	DATE
DRAWN		
MODELED		
ENG APPR.		

PART NAME: Fan Sound Test
JOB ORDER:
SIZE: A | DWG. NO | REV. D
SCALE: 1:48 | WEIGHT: 7090.969 LBS | SHEET 1 OF 1

57.8520

VENTILATION PLAN CHECK LIST

Company Name Silver Star Mine I.D. 05-03528

Mine Name Star Mine Operation Contact Person John Trujillo

Title Mine Manager Phone 970-596-4082

Updated Plan ✓ Addendum to plan _____

The plan shall, where applicable contain the following:

(a) The mine name: ✓

(b) The current mine map or schematic or series of mine maps (copy map and color code)
Sectional view _____
Plan view ✓
3D view _____ schematics of an appropriate scale
legend properly labeled showing locations listed below _____
not greater than five hundred feet to the inch, showing:

(1) Direction and quantity CFM readings on map of principle air flow flows
CFM in 10,500 CFM out 9,500 Balance 7000

(2) Location of seals used to isolate abandoned workings ✓

(3) Locations of areas withdrawn from the ventilation system N/A

(4) Location of all fans
Main ✓
Booster ✓
Auxiliary ✓ fans not shown in paragraph (d) _____

(5) Locations of
Air regulators _____
Stoppings ✓
Ventilation doors, ✓
Vent tubes ✓ not shown in paragraph (d) _____

(6) Locations of overcasts N/A
Undercasts N/A
other airway crossover devices not shown in paragraph (d) _____

(7) Locations of known oil and gas wells N/A

(8) Locations of known underground mine openings ✓
Old workings _____ adjacent to the mine _____

(9) Locations of permanent underground shops N/A
diesel fuel storage depots N/A hoist room compressors N/A
battery charging stations N/A explosive storage facilities ✓
Permanent facilities are those intended to exist for one year or more. _____

(10) Significant changes in the ventilation system projected for one year. _____

(c) Mine fans data for all active main and booster fans including
manufacture's name type size ✓ fan speed ✓
blade setting _____ approximate pressure at present _____
operating point _____ fan curve graphs ✓ See fan curve
motor brake horsepower rating _____

(d) Diagrams, descriptions or sketches showing how ventilation is accomplished in each
typical type of working place ✓
including the approximate quantity of air provided ✓
typical size of auxiliary fans used ✓
(Copy map and color code) Deficiencies found _____

(e) The number and type of internal combustion engine units used underground,
including make and model N/A
Type of engine N/A
Make and model of engine N/A
Brake horsepower rating of engine N/A
Approval number N/A

Comment:

_____

_____

Date reviewed: 1/22/2013 Reviewed by: [redacted]

Date reviewed 1/28/13 Supervisor review [redacted]

Plan deficiencies: Yes_____ No ✓

Date deficiency letter sent:_____ Due date for corrections _____

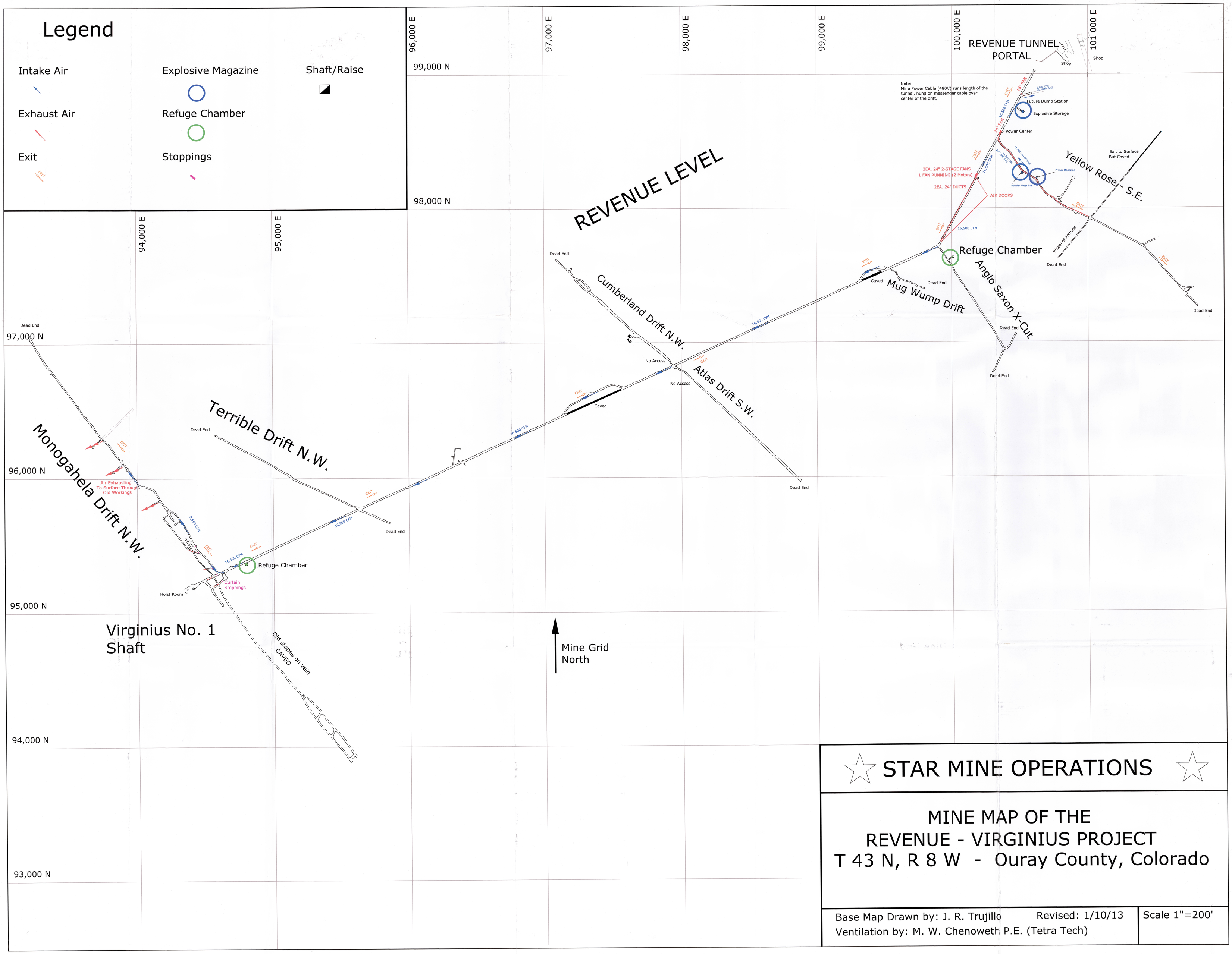

STAR MINE OPERATIONS

MINE MAP OF THE REVENUE - VIRGINIUS PROJECT

T 43 N, R 8 W - Ouray County, Colorado

Base Map Drawn by: J. R. Trujillo Revised: 1/10/13

Ventilation by: M. W. Chenoweth P.E. (Tetra Tech)

Scale 1"=200'